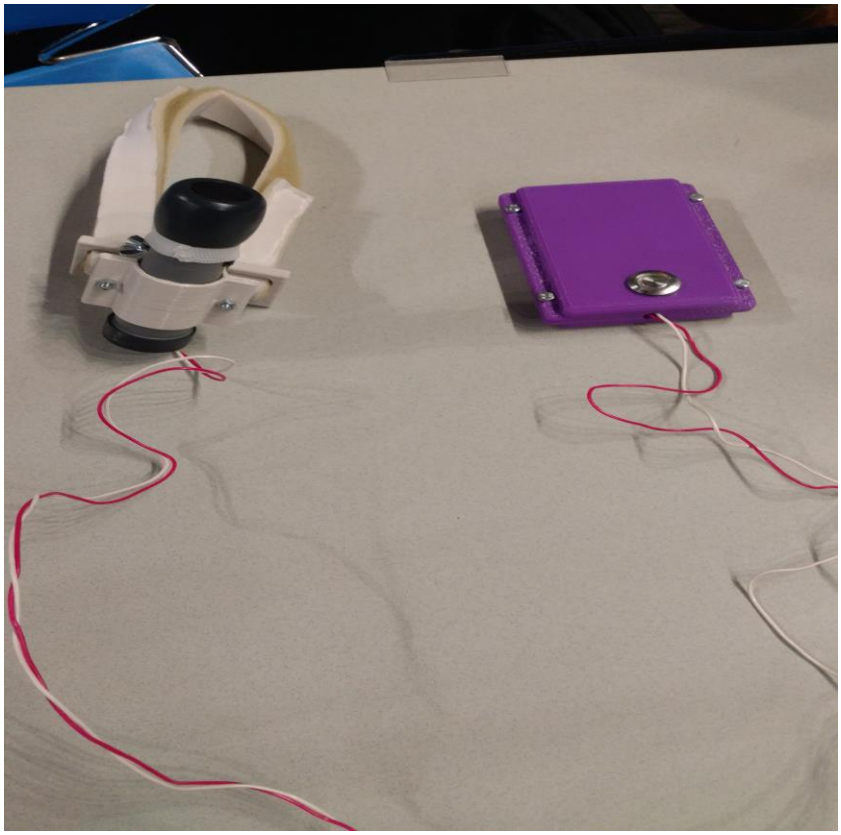

Prototype Electrolarynx Holder for Single Switch Activation

Lead Author: Stephen Monaco Email Address: sxm468@psu.edu

Additional Authors: Ian Robbins Dhananjay Bhaskar

University: Penn State University URL: http://www.psu.edu/

Programs: Mechanical Engineering: Ian Robbins, Dhananjay Bhaskar
Biomedical Engineering: Stephen Monaco

Supervisor: Dr. David McNaughton Email: dbm2@psu.edu

Problem Statement:

The most important need for both patients and caretakers is the ability to communicate effectively. For some patients, such as those who have received a tracheotomy or have a damaged larynx, communication is difficult without some form of external aid. Currently, there are a number of methods that address this problem, including an electrolarynx, which is a handheld device that vibrates the throat to allow the patient to speak in a monotone voice. Electrolarynxes are often used as a secondary method of communication due to the other solutions available for patients with laryngectomies. However, before these solutions can be implemented, the patient is reliant primarily on an electrolarynx for vocal communication. The common issue with using an electrolarynx is that it typically requires the user to hold it against their throat and activate it by hand. This issue is especially pertinent if, as a result of the laryngectomy or other possible complications, the patient's fine motor skills are impaired in such a way that make the normal operation of an electrolarynx difficult for them. Our team has made a prototype holder and harness for an electrolarynx to solve the problem of electrolarynx operation for recent patients who have had a laryngectomy on behalf of RERC on AAC, a Penn State research group.

Methods Considered:

When first going about designing the harness our team consulted Richard Hertig, a rehabilitation engineer that our sponsor helped us contact, to determine the core needs of the patient that our final design would need to address. The key customer need we determined was patient comfort and has been reflected in our strap design which is a single piece of velfoam that conforms to the neck. Also, the ability to easily remove the electrolarynx from the holder is a major design feature to ensure patient comfort. Comfort during long-term use is addressed by the three degrees of freedom built into the adjustable holder that allow repositioning of the electrolarynx against the neck, although there was little we could do in terms of comfort for the electrolarynx itself since it needs to be firmly pressed against the neck for it to function.

The other needs we determined were cleanliness, cost, ease of use, durability, ease of manufacture, and cosmesis. While comfort was the most important by a significant margin, cost and cleanliness were also core factors in our design. This ranking was determined by us using an AHP matrix and weights established by our team and Richard Hertig. The matrix can be seen in Table 1.

Table 1: AHP Matrix.

	Comfort	Cleanliness	Ease of Use	Ergonomics	Cosmesis	Cost	Manufacturability	Durability	Weights	%
Comfort	0.301	0.277	0.353	0.254	0.242	0.385	0.219	0.242	0.284	28.4
Cleanliness	0.301	0.277	0.235	0.254	0.242	0.308	0.188	0.193	0.250	25.0
Ease of Use	0.100	0.138	0.118	0.085	0.107	0.154	0.125	0.097	0.116	11.6
Ergonomics	0.100	0.092	0.118	0.085	0.107	0.026	0.094	0.193	0.102	10.2
Cosmesis	0.033	0.031	0.029	0.021	0.027	0.015	0.125	0.010	0.036	3.65
Cost	0.060	0.069	0.059	0.254	0.134	0.077	0.156	0.193	0.125	12.5
Manufacturability	0.043	0.046	0.029	0.028	0.007	0.019	0.031	0.024	0.029	2.85
Durability	0.060	0.069	0.059	0.021	0.134	0.019	0.063	0.048	0.059	5.92

As far as cleanliness of our product is concerned, we swiftly realized that cost would be a issue with it because of how we would have to go about constructing the prototype. To stay within the bounds of our budget and to reduce time pressures, we opted to have the bracket, electrolarynx holder, and remote controller 3D printed out of PLA plastic. As a result of our choice of material and construction, our final prototype does not meet FDA standards for cleanliness in a medical setting due to its potential exposure to bodily fluids. Our ideal method of solving this issue would be to have the necessary parts plastic injection molded using ABS plastic which, when properly polished, would meet current standards.

After establishing the needs of the patient, which of the needs required our focus, and how the electrolarynx holder would need to be designed, we began iterating on designs for the electrolarynx holder and the harness.

For the initial bracket prototype (P1), a split bracket (gray) was created to encompass the electrolarynx device. This bracket is held together with small screws and has an angled square bracket on its rear. The harness bracket (green) has a square slot in front to accept the angled square bracket. The rear plate of the harness bracket has two square slots to accept a harness that wraps around the patient's neck.

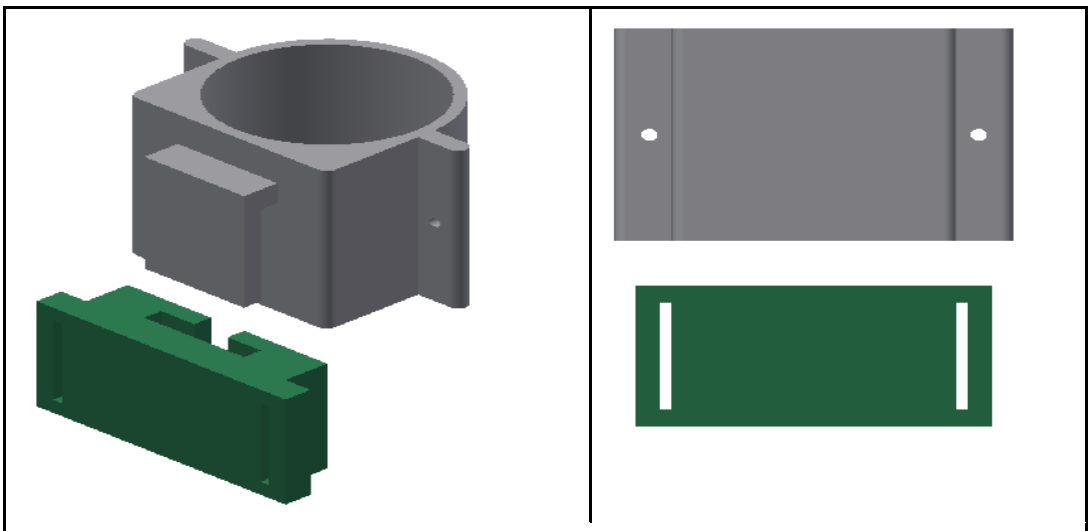

Oblique view of square sliding mechanism.	Rear plate view.

Figure 1. Bracket Prototype 1.

The second bracket prototype (BP2) uses a similar attachment system, but exchanges the square sliding mechanism for a cylindrical one. This allows the patient to freely rotate the electrolarynx within a range of +/- 35° from the neck's midline. The rotation will be stopped by a tight friction fit. Additionally, the square slots for the harness were modified to be horizontal instead of vertical. This change allows the fabric harness to lie flat along the entirety of the patient's contact area.

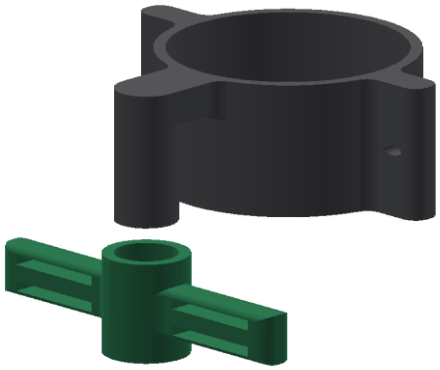

Oblique view of cylindrical sliding mechanism.

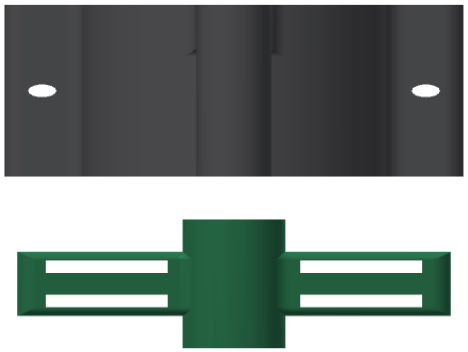

Rear plate view. The harness slides into the bottom slot, out the top, and attaches to itself.

Figure 2. Bracket Prototype 2.

The fabric harness prototypes will be made of a commercially available ½” or ¾” fabric webbing and were inspired by existing camera strap designs. Because the bracket prototypes are designed to accept the fabric directly rather than through a connecting fastener, a mechanical securement to secure the strap back onto itself is necessary. Potential candidates for mechanical securement include snaps, buckles, clips, alligator clamps, and velcro.

Neck harness (HC1)

Shoulder harness (HC2)

Figure 3. Harness Concepts. Image sources: Amazon.com

The behind-the-neck concept of harness concept (HC1) would pass through the electrolarynx holder bracket and secure back onto itself. A second harness concept (HC2) is a shoulder harness concept to improve adjustability and stability of the harness.

Description of Final Approach and Design:

The neck harness HC1 and bracket BP2 were selected as the best starting points for further prototype development and changed minimally up to our current prototype. The neck harness contains less fabric and connectors than the shoulder harness which leads to higher comfort, easier manufacturing, easier cleaning, and easier use. The BP2 prototype provides an extra degree of freedom for better positioning, contains less material, and is easier to clean than the BP1's square slot connector. The most significant alteration to our bracket design was the addition of another hinge to add another degree of motion and remove the plastic pin that would have been used. The pin, as well as all the other hinges, were replaced with steel bolts which was integral to managing the stresses in the electrolarynx holder due to the previous plastic pins having insufficient durability. A CAD model of the final design can be found in Figure 4.

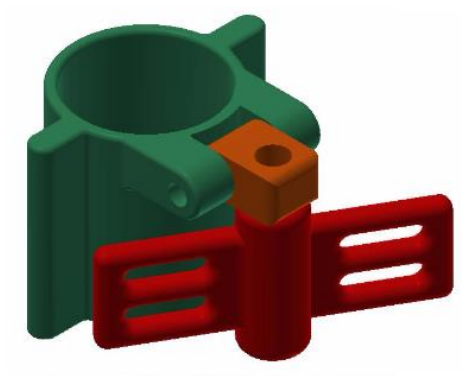

Front Isometric View	Rear Isometric View

Figure 4. Final Bracket Prototype.

Outcome:

When we tested our final prototype we found a few issues that we would consider when refining our prototype. The first was that the bracket section show in red on Figure 4 angles itself to dig into the neck of the patient over time when the strap was under tension. Going forward we might increase the bracket length so that it is harder for it to twist around or perhaps we might space the strap slots further apart for the same effect. Also, the bolts we used to fasten the different parts of the holder together required tools to tighten even with wing nuts in place. Rubber overmolds for the bolt heads would easily answer this minor issue, which concludes the problems we found during testing.

Cost:

Not including the $262 Blom Singer electrolarynx and the free 3D printing services our school offered, our prototype electrolarynx holder cost roughly $120 (Main Medical). If we were to plastic injection mold our prototype for commercial volume, thanks to research done by Wired.com, the initial start up cost could be expected to run, at minimum, $1500. Assuming low production, a reasonable pricing for our electrolarynx holder would be from $160 to $180.

Significance:

Communication between people is one of the most important aspects of day to day life. When someone is no longer capable to communicate verbally due to illness or injury the impact is severe, especially when they are recovering from the necessary surgery to resolve the illness or injury. For older patients and those that lack fine motor control, this issue is compounded because of the difficulty they face in operating an electrolarynx. Our prototype is intended to solve this problem for long enough that the patient can undergo whatever surgery or procedure they need to find a more permanent solution to aid their speech. We believe that this prototype of ours could reasonably help alleviate that, given more time and resources to turn it into a proper product.

References:

1. "BIRUGEAR Black Anti-Slip DSLR Camera Neoprene Neck/Shoulder Strap for Canon, Nikon, Sony, Panasonic, FujiFilm, Olympus and More Digital SLR Camera." Amazon.com : : Camera And Optics Carrying Straps : Electronics. N.p., n.d. Web. 29 Sept. 2016.
2. "Clanmou Chest Belt Harness Strap with J-Hook Mount Aluminum Thumbscrew for Gopro HERO 4 3 Action Cameras." Amazon.com : : Camera & Photo. N.p., n.d. Web. 29 Sept. 2016.
3. "Blom-Singer electrolarynx." Main Medical. N.p., n.d. Web. 29 Sept. 2016.
4. Flaherty, Joseph. "Affordable Injection Molding Turns Tinkerers Into Tycoons." *Wired*, 30 Jan. 2013, https://www.wired.com/2013/01/protomold/. Accessed 27 Oct. 2016.