Antonio Montes de Oca Gómez
Brenda Ramírez Camargo
Pablo Borboa Vite
David Alejandro Calahorra

Congenital Torticollis Rehab

ABSTRACT

Congenital torticollis is a condition affecting an important amount of newborns, who need to be diagnosed and treated in early stages in order to avoid long-term consequences, which in worst case situations can lead to mild scoliosis or plagiocephaly [1]. Physical therapy treatment has shown an effectivity rate of about 90 to 99%. Monitoring the affected muscle's activity while performing prescribed exercises at home is an important way to to provide feedback information for parents and professionals treating the case.
Currently, there are many methods of physical therapy used to treat torticollis, including:positioning, environmental adaptations, passive and active stretching of the tight sternocleidomastoid, strengthening of weak neck, as well as a therapy programs to be performed at home by the infant's caregiver [2].

Nowadays, to the best of our knowledge, there are no devices or rehab systems available for measuring the progress of the therapy, the muscle activity and/or quantification of the prescribed exercises. Given the paucity of rehab systems (software and hardware) to treat torticollis in infants, we proposed the development of a rehabilitation device capable of measuring and analysing electromyographic signals of the affected muscles. The proposed system is expected to provide feedback on the correct execution of the prescribed home exercises and measure the progress of the therapy.

PROBLEM STATEMENT & BACKGROUND

Congenital torticollis is a musculoskeletal condition observed at birth or early infancy that affects between 0.3 and 16% of newborns nowadays, becoming the third most common congenital musculoskeletal anomaly [1]. It is characterized by unilateral fibrosis and shortening of the sternocleidomastoid muscle, presenting limitation of neck motion, neck lateral flexion to the ipsilateral side and rotation to the contralateral side causing the chin to point toward the contralateral. [2] The clinical element is associated to a firm mass sized between 1 to 3cm, which is normally palpable at 1 to 4 weeks of age. [1]

There are three common approaches for treatment, including physical therapy, botulinum toxin and surgical treatment. Most cases resolve within the first year after birth. Its prompt diagnosis and treatment with physical therapy can avoid further complications such as craniofacial asymmetry, ocular damage, intermittent head tilt and mild scoliosis. [3, 4]

Traditional physical therapy treatment in children has proved to have a success rate between 90 and 99%. This type is performed by a specialist in determined sessions and

complemented by home exercise program designed based on an assessment of the baby's motor skills. [1]

Nowadays there is no way to have a feedback from the home exercise program that helps to determine the effectivity of the exercises performed by parents, since they have to develop them with no continuous supervision from a professional. Therefore, we propose a method to measure, quantify and register the progress of the therapy performed on babies.

SOLUTIONS CONSIDERED

Our proposed rehabilitation device aims to measure and analyse to rehabilitation variables: 1) muscular activity of the newborn in both sides of the neck (two muscles), and 2) the range of motion (angular rotation) the infant's head. By measuring the muscular activity, and saving this information through a time lapse of weeks, we can determine the overall muscular rehabilitation of the newborn. Both sides of the neck should have the same electrical activity for a total rehabilitation to happen. This provides a clinical history of the patient so that the parents can visualize the improvement and determine if the therapy is effective or not. Similarly, the strain gauge will indirectly measure the angle of the head and save this information to determine the effectivity of the therapy. Both variables are required to quantify the level of progress since both muscles should develop similarly and the head should be equally tilted to avoid imbalanced compressive forces on the spinal cord. All of the electrodes and the strain gauge are attached to a comfortable band that fits the neck of the newborn. It should be the least obstructive possible.

DESIGN

The device gathers information from 2 EMG channels and 1 strain gauge channel. The three channels were amplified by operational amplifiers and their output was processed by a microprocessor, in this case an Arduino. All electronic components were powered by two 9 V batteries in order to avoid any harm by leakage current by AC.

The instrumentation chain for the EMG channel is shown in Figure 1. The instrumentation amplifier (AD620) amplified the voltage output of the electrodes by 1000 V/V. Then, the first low-pass filter was configured to cut frequencies above 500 Hz, since muscle signals are generally below this frequency, the second one cuts above 3 Hz in order to cut off any offset the signal may have. The post-amplification amplified the signal by 5 V/V. Posteriorly, the signal was converted to digital and processed by the microprocessor. When the channel detected activity in any of the two affected muscles measured, the microprocessor emitted a light through an LED for visual feedback.

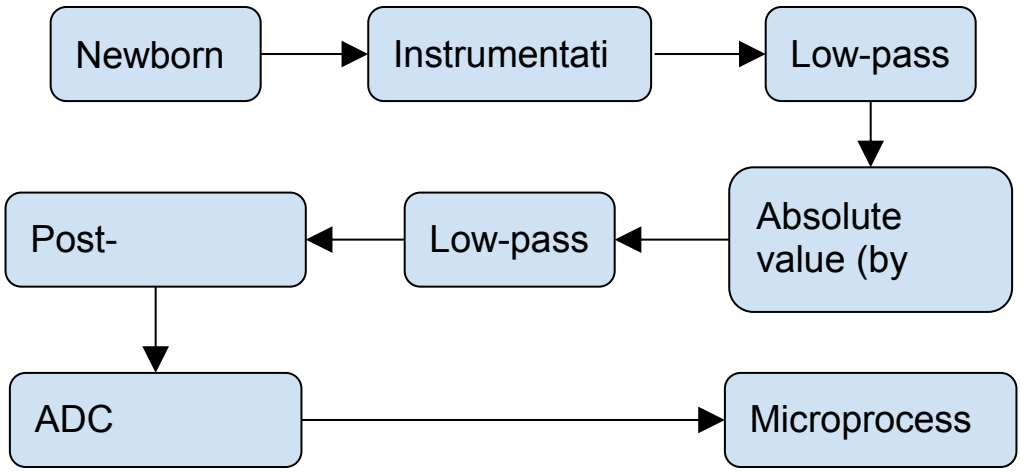

Figure 1. Diagram of an EMG channel.

Electrodes are attached to an elastic, breathable, neck brace (made of cloth) for easy positioning of the device as shown by Number 1 in Figure 2. The electrodes are placed in the holes so they can measure activity in the muscles of the neck. Number 2 shows the box where the microcontroller and the LCD are placed. This will go over the baby's chest, and Number 3 is a strap so the bow is not loose and hanging from one side to another. Outputs such as exercise steps are displayed on a LCD once the previous step is satisfactorily fulfilled for parents supervision.

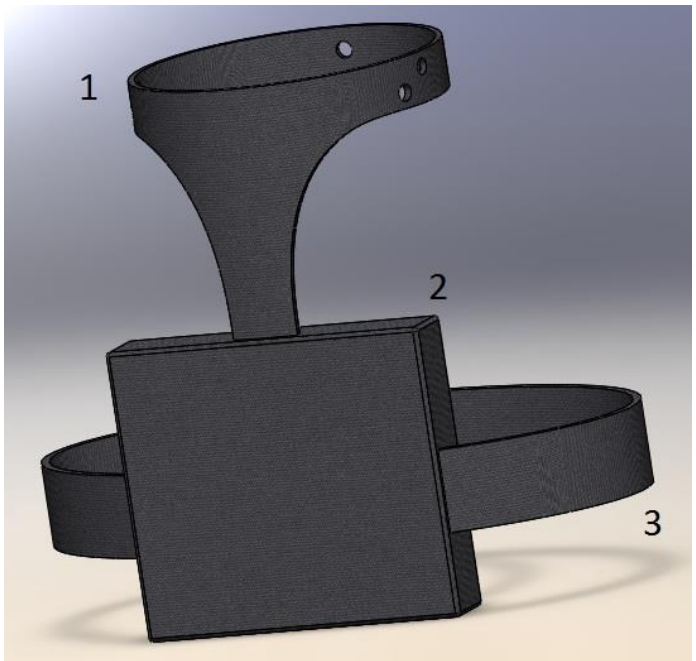

Figure 2. Device that the infant would wear.

RESULTS AND FEEDBACK

The ability to track of the infant's neck movement is fulfilled and visual feedback of when and which exercise should be next on a home routine are well specified for parents to follow. Once a movement is completely and correctly executed, an indicative LED turns on, leading to the next movement or repetition in row. When a determined number of repetitions are done, an LCD shows a message indicating the exercises have been finished, allowing for the continuation of the following exercises in the prescribed routine. The magnitude of the contraction could be measured and stored in a database, which will show the progress of the therapy accomplished throughout a determined period of time.

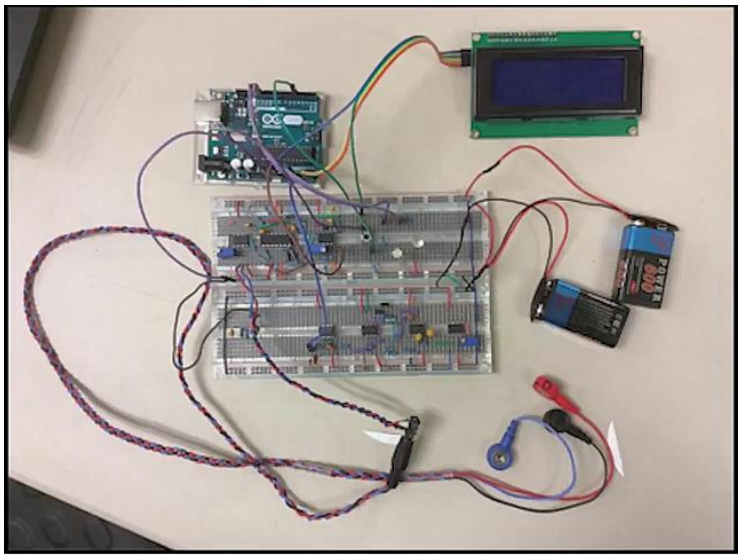

Figure 3. Instrumentation of the device.

COST

Component	Price (USD)
LCD	$7.00
TL082	$6.02
AD620	$15.30
Electrodes	$2.00
Resistors	$0.50
Capacitors	$0.70
Arduino	$24.50
PLA	$2.00
Cotton Fabric	$2.00
TOTAL	**$60.02**

Table 1. Prices of each component used.

DISCUSSIONS AND CONCLUSIONS

Although the system satisfies the basic needs for the rehabilitation of congenital torticollis, it is not a complete treatment for the pathology. Physical therapy must be applied and it is essential that this physical therapy be realized by a professional caregiver so with the help of the system the therapist could measure the baby's progress.

The set of steps that the display shows are based on a standard exercise routine used to increment the flexibility on the damaged muscle for congenital torticollis. The use of this device should be in synchrony with professional's advice on the routine that best suits each particular case, as well as periodic physical therapy and consults developed regularly. This device does not intend to replace evaluation or treatment on patients conditions, but to serve as friendly guidance, support and motivation for parents, since they also receive a feedback on the improvements of movement on the baby after several repetitions.

A second approach is to place a device in the cradle that emits lights and sounds that are attractive for the newborn. The objective is that the baby turns his head to see the device, stimulating the muscle growth and strength of the impaired neck side. Therefore, this device continues with the therapy even when the parents are not around.

REFERENCES

[1] Congenital Muscular Torticollis: An Overview. (n.d.). Retrieved April 03, 2017, from https://www.hss.edu/conditions_congenital-muscular-torticollis.asp
[2] Therapy Management of Congenital Muscular Torticollis. Retrieved April 04, 2017, from http://almacen-gpc.dynalias.org/publico/Torticolis%202009.pdf
[3] Congenital Muscular Torticollis: results of conservative management with long-term follow-up in 85 cases. Retrieved April 03, 2017, from http://europepmc.org/abstract/med/3566514
[4] Congenital muscular torticollis: point of view of plastic surgeon. Retrieved April 03, 2017, from http://scielo.isciii.es/scielo.php?script=sci_arttext&pid=S0376-78922014000100007