PENN STATE RACING

SEPTEMBER 2017

TEAM NEWSLETTER

A MESSAGE FROM THE TEAM

Dear reader,

Penn State Racing has returned! The beginning of the 2017-2018 academic year marks a new chapter for our team. After a Summer dedicated to research and design work, we now turn our attention to the manufacturing of our 2018 vehicle. Many exciting changes are coming to this year's car, the most significant being our transition to a carbon-fiber monocoque chassis. The new chassis aims to be lighter, safer, and more rigid than last years steel tube space frame.

Deciding to design an almost entirely new vehicle was difficult but necessary. In order to remain competitive at the Formula SAE Michigan event, we must employ the full might of our design and manufacturing capabilities and incorporate new technologies. Developing the 2018 car will undoubtedly prove challenging, but we believe this year's team is more poised than ever for success. We hope to create a platform that can be referenced to and improved upon for several years to come.

We are eager to begin yet another year filled with diligent design and manufacturing, continuous teamwork, and personal development. Formula SAE challenges students to engage real engineering problems head on, and has primed this year's team to deliver yet another capable vehicle. We are also excited to continue to represent our university, our corporate partners, and our proud alumni for this season in the most competitive collegiate design series in the world!

In this newsletter, you will see progress made in each subsystem this month, as well as a "Member of the Month" page in which we feature new members who have made significant contributions.

Thank you for your continued support!

PENN STATE RACING

AERODYNAMICS & COMPOSITES

The Aerodynamics and Composites subsystem has been redesigning the 2018 sidepods. Last year, the sidepods were largely structural and not aerodynamically effective. Instead, they were meant to direct air into the large radiator on one side and protect sensitive electronic components on the other side. This year, we are moving to a dual-radiator setup. The smaller area on each side will allow more room to develop sidepods that not only direct air for cooling, but create downforce and in turn improve track performance. Internally mounting the electronics will eliminate the need for housing.

Simultaneously, computational fluid dynamics simulations are being run in STAR-CCM+ to test different front and rear wing configurations. We are extremely grateful for the support of SIEMENS, as they have helped us utilize the programs full capabilities. Ultimately though, all elements of the aerodynamic package are interdependent, so the wing profiles, positions, and angles of attack must wait until the sidepods are modeled so we can understand how they will interact. The next month will be dedicated to finalizing those models.

CHASSIS

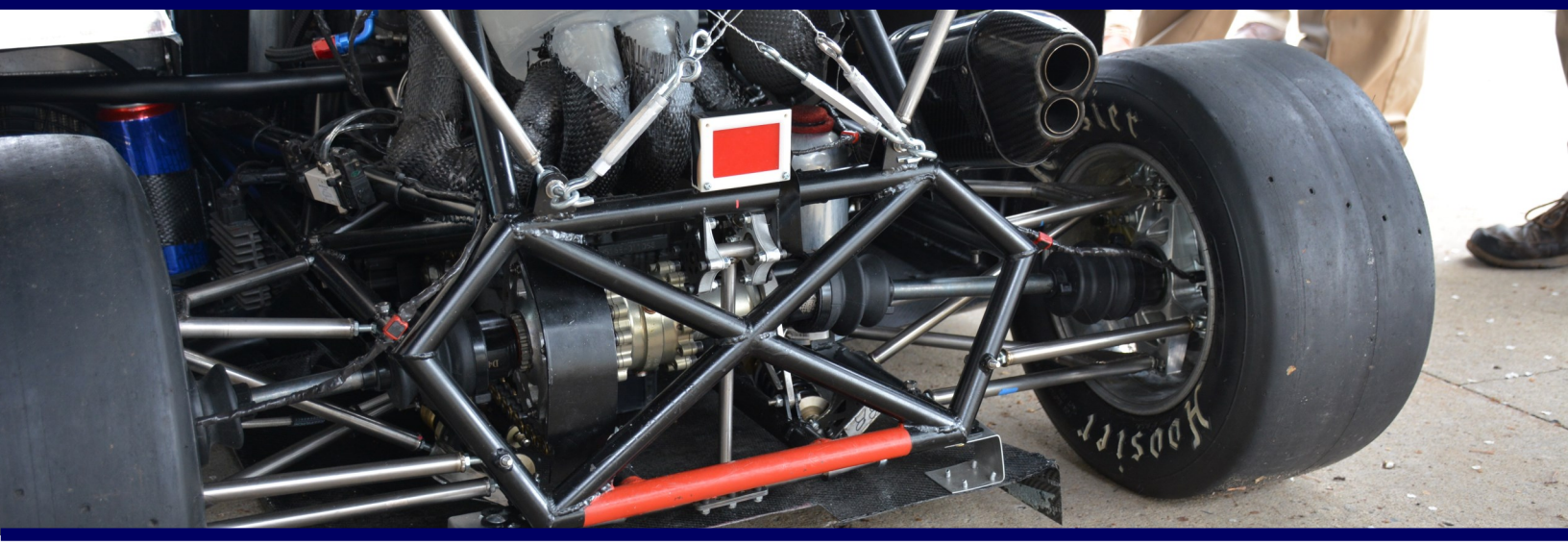

The development of our carbon-fiber monocoque has been an effort spanning multiple subsystems. The carbon layup and composite manufacturing skills of the Aerodynamics & Composites subsystem have coupled nicely with the design and strength analysis skills of the Chassis subsystem. Our efforts so far have produced an exact 3D model of the chassis and a timeline outlining the necessary manufacturing procedures. The positive mold of the monocoque shape is set to be machined this month from foam generously donated by DUNA inc. We have allotted time for unforeseen complications.

The two most evident benefits of a carbon chassis are decreased weight and increased strength. Unfortunately though, the costs of the improvements are substantial. Due to its desirable properties, raw carbon fiber of the correct grade is quite expensive. We are only able to afford such resources through the generous support of our university and corporate sponsors, whose help we are extremely grateful for. Come competition though, we will have to justify the decision we made and carefully analyze the benefits and drawbacks. We are confident that the former far outweigh the latter, and we will be prepared to present our reasoning come Formula SAE Michigan.

Frame Welding Jig

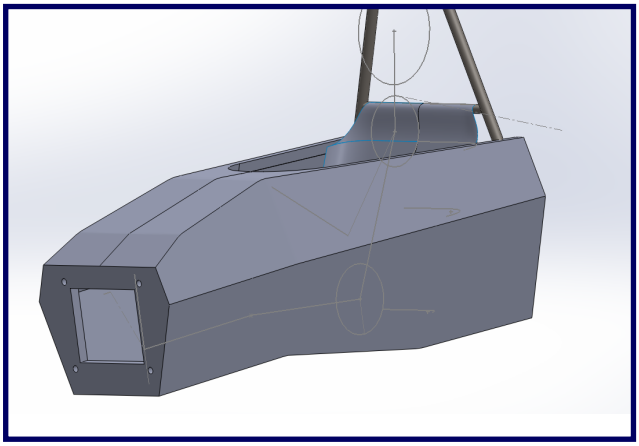

Preliminary Monocoque Shape

ELECTRONICS

The Electronics subsystem has been digitally modelling the 2018 engine harness this past month, and will continue to do so throughout October. Our engine, fuel delivery, and steering wheel configurations are largely similar to last year's, so the wiring diagrams will be completed in a timely fashion. Thankfully, we made a concerted effort in 2017 to document our progress within the electronics subsystem. It has made the development of the 2018 car's system easier, and we will continue that practice throughout this year as well. Electronics have proven a weakness in recent cars, so improving the system's reliability and accessibility will be an area of deliberate focus on the upcoming vehicle. We have already increased our testing and validation efforts, having taken the 2017 car out to the track several times. With each trip, we understand the system better and learn how to troubleshoot and improve it. By the time the 2018 car is running, we will be familiar enough with the system to diagnose, solve, and prevent problems with relative ease.

Steering wheel

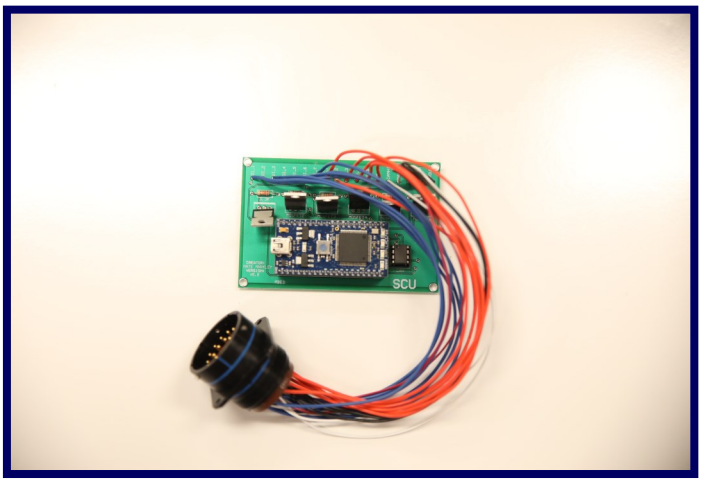

Shifting Control Unit

POWERTRAIN

The Powertrain subsystem will see significant changes this year. With an entirely new rear sub-frame, mounting solutions for the engine, differential, and fuel delivery system must be reimagined. Additionally, the redesigned intake must be adjusted to comply with packaging guidelines outlined in the recently revised FSAE Rulebook. While the intake was downsized to improve throttle response and mid-range power, it will remain the same material and once again be 3D printed by our generous sponsor RealizeInc.

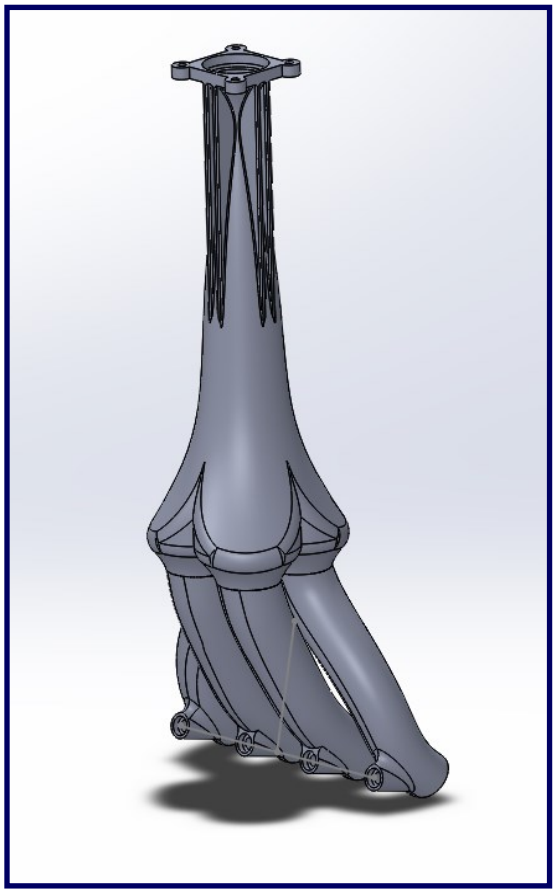

Preliminary intake design

Next month, we will continue to calibrate the 2017 car's pneumatic shifting control. Although it performed admirably at competition last year, we are working to improve its reliability and consistency so that we can continue to train our drivers and effectively gather vehicle data while doing so. The 2018 car will likely utilize the same system, with one added feature: a manually actuated clutch. Without it, last years car had no way to accelerate from rest besides with launch control, which is meant to provide maximum performance during the Acceleration event. The manually actuated clutch will allow us to improve low speed maneuverability, without having to sacrifice the speed and ease of use that characterizes the pneumatic system.

SUSPENSION

2017 Upright Assembly

The 2018 redesign efforts started from the ground up, literally. The suspension geometry was first to be finalized. We determined our wheelbase would remain the same, while the track would narrow 0.6 inches in the front and widen 1 inch in the rear. These changes will increase the allowable width of our rear wing elements while ensuring the car retains it's responsive handling. After the Suspension geometry came A-arm design, which will be symmetrical about the hub axis as opposed to last year's offset design. The largest change to this year's suspension will undoubtedly be the switch from a pullrod shock actuation in the front to a pushrod actuation. The change allows us to mount the shocks on top of the monocoque chassis, making room for a more aerodynamically effective front diffuser and allowing for a lower ride height. The rear suspension will remain pushrod actuated.

Since the design of many Suspension components have been finalized, manufacturing will continue throughout this month. The balljoint clevises, newly shaped to conform to the monocoque's chamfered edges, will be made first. A-arms will come soon after. These components are being manufactured in parallel with the monocoque and rear subframe, so that upon completion they may be mounted immediately.

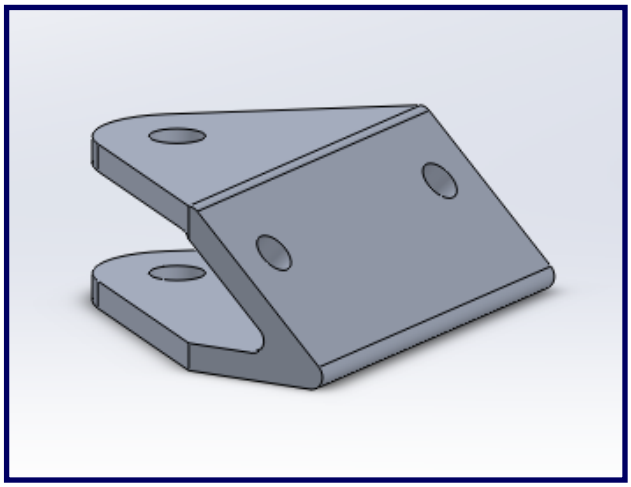

2018 Front lower balljoint clevis

2017 Suspension in action

MEMBER OF THE MONTH

MICHAEL HAND

Michael is a freshman in Mechanical Engineering who joined Penn State Racing at the very beginning of the semester. Immediately, Michael showed interest in our pneumatic shifting system and so has been thoroughly involved with the Powertrain subsystem. He has spent the first month of the semester becoming familiar with the system, and is now researching opportunities for improvement. These include the integration of an automatic shifting function that signals perfectly timed shifts during an acceleration run, and our manually actuated clutch. The features could prove very helpful at competition, especially during the Acceleration event. Outside of the team, Michael enjoys working on his own Jeep and playing basketball. We look forward to his continued contribution!

Congratulations, Mike!

PENN STATE RACING

THANK YOU!

In addition to our sponsors, we are thankful for the unending support of the following individuals:

Dr. Thomas Juska
Applied Research Lab

Dr. Karen Thole
Department Head, Mechanical and Nuclear Engineering

Admiral Paul Sullivan
Executive Director, Applied Research Lab

Dr. Matthew Parkinson
Learning Factory Director

Dr. Todd Palmer
Applied Research Lab

Cindy Winkelblech
Program Administrator

Becky Benson
Administrative Support Assistant

Bill Genet
Learning Factory Supervisor

Dr. Stephanie Stockar
FSAE Faculty Advisor

Rob McAllister
Learning Factory Supervisor

We also thank all of the Penn State Formula SAE alumni that continue to provide us with invaluable guidance and assistance every year. Thank you!

CONTACT US

Team email:

Pennstateracing@gmail.com

Team address:

Penn State Racing
118 Engineering Services
University Park, PA 16802

Visit us on the web at sites.psu.edu/PennStateRacing

Like us on Facebook! www.facebook.com/PennStateRacing

2016-2017 CORPORATE SPONSORS

Penn State Formula SAE would like to express our most sincere gratitude for the generous university and corporate partners who made our project possible—it would be impossible without your continued support. Thank you for your support!

DIAMOND LEVEL SPONSORS

($10,000 + or equivalent in products or services)

PENNSTATE ARL

THE PENN STATE LEARNING FACTORY
Collaborate. Educate. Innovate.

TIMET

THE LARSON INSTITUTE

PLATINUM LEVEL SPONSORS

($8,000 + or equivalent in products or services)

PennState College of Engineering
MECHANICAL AND NUCLEAR ENGINEERING

PennState College of Engineering
HAROLD AND INGE MARCUS DEPARTMENT OF INDUSTRIAL AND MANUFACTURING ENGINEERING

BRIDGESTONE

SIEMENS

Ford

GOLD LEVEL SPONSORS

$5,000 + or equivalent in products or services)

AXALTA

GM

JOHN DEERE

TITANX

Kawasaki

realize inc.
Your Partner in Product Realization

2016-2017 CORPORATE SPONSORS

SILVER LEVEL SPONSORS

($3,000 + or equivalent in products or services)

Chevron

GKN

Dassault Systèmes SolidWorks

Cummins

VOLVO

PCC Precision Castparts Corp.

Ingersoll Rand

Truck-Lite

TITANIUM LEVEL SPONSORS

($1,000 + or equivalent in products or services)

Stuckeman School

FK BEARINGS

ArcelorMittal

Summit Racing Equipment

SKF

TeXtreme®

GT Gamma Technologies

DOW®

BRONZE LEVEL SPONSORS

($500 + or equivalent in products or services)

Rock West Composites

Itching for Fun Fiberglass Supply

CORSA TECHNIC

RH Redhorse Performance

HMS motorsport

Solid Concepts

mpc Millenium Plating Company

www.magplate.com

MiSUMi

Optimum vehicle dynamics solutions

RICARDO