PENN STATE RACING

FEBRUARY 2018

TEAM NEWSLETTER

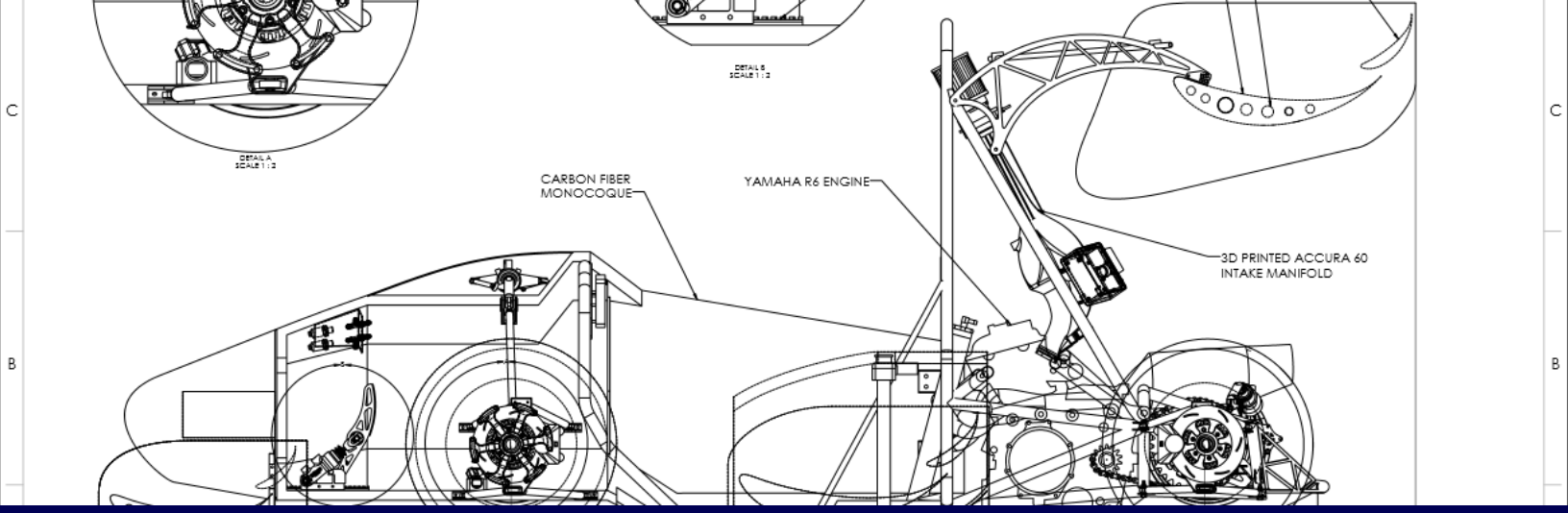

A MESSAGE FROM THE TEAM

Dear reader,

Penn State Racing is excited to announce that it's first ever carbon-fiber monocoque chassis is complete. We are both proud of the accomplishment and grateful for the opportunity to be a part of such an amazing project. The completion of the monocoque marks a significant milestone for Penn State Racing, as until now, no team in our 24 year history had chosen to engage this radical but necessary change. The redesign that our 2018 car has undergone, of which the monocoque is the centerpiece, has demanded time, patience, collaboration, and creativity. It has been a long and arduous process, but we are confident that the returns in performance and efficiency will have made it worth our efforts.

Progress will not stagnate during spring break. Our core members will remain in State College to ensure the chassis, suspension, and aerodynamic assemblies are ready for testing. Our equally important Learning Factory supervisors will keep the shop open so that we can take full advantage of the academic hiatus. Then, our Aerodynamics & Composites and Suspension teams will accompany the car to Akron, Ohio, where Bridgestone will conduct kinematics and compliance testing on our suspension. We will also take some time to update their staff on the team's progress and admire their expansive facility, where two of our current members have had internships. We will then proceed to Allen Park, Michigan where Ford has allocated us a valuable 8-hours of testing in their wind tunnel. In Michigan, we will also have the opportunity to reconnect with several Penn State Racing alumni who have graduated to work for the American manufacturer.

In this newsletter, progress made in the last month and plans for the upcoming month are outlined.

Thank you for your continued support!

PENN STATE RACING

AERODYNAMICS & COMPOSITES

For Aerodynamcics & Composites, the month of February was devoted to mold preparation, including machining, gel coating, sanding, and fiberglass layup. In the first week of this month, reinforcing balsa wood ribs and carbon fiber tube spars will be assembled to support the wings internally. The carbon will be promptly laid up, trimmed, and mounted after the brief curing period. This year's package features entirely new diffuser, sidepod, front wing, rear wing, and nosecone designs, so the molds have presented new challenges. We are looking forward to validating that the troubles have yielded a more effective package in Ford's wind tunnel this break.

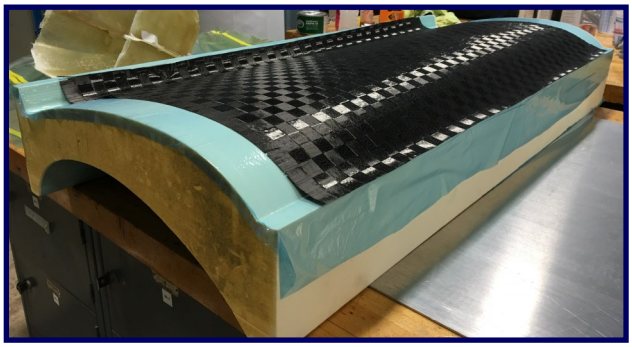

The data we generate at Ford will be valuable for several reasons. Firstly, it will allow us to see how the performance metrics recorded in the physical domain compare to those predicted by our virtual simulations and mathematical calculations. If the differences are small, we will have confirmed that the performance of our vehicle is in fact improved by the implementation of our aerodynamic elements. This validation is essential during the Design event, when judges evaluate whether decisions we made during vehicle development actually contributed to an increase in performance. Even if the data does not exactly match our expectations, we can still receive the same high Design score so long as we demonstrate an understanding of our simulations, the data, and how they both could be used to revise and improve our aerodynamics package. That leads to the second reason the data we collect will be valuable. No matter the performance of our current vehicle, the information we obtain can be used to guide the design of next year's.

POWERTRAIN

As of February, the shifting, drivetrain, engine management, and pedal tray systems have been fabricated, assembled, and configured. We also had our brand new 3D printed intake delivered this month by RealizeInc. This year's early completion of our rear subframe and the focused demeanor of the Powertrain system have led to this remarkable progress. Thanks to the support of the Learning Factory, we were also able to revive our Dynojet dynamometer this month. It had laid dormant for several years until we recently identified the defective parts and made the necessary repairs. In March, we will use the dyno to gather engine data from the 2017 car and develop a more efficient tune.

We will now divert our attention to the cooling system. This year, we are receiving help from TitanX with the development of our dual radiator setup. They have already lent advice on how to plumb the system, and now their generous engineering team is developing a bespoke set of radiators which will satisfy our cooling needs. We hope to have those delivered this month so that we may promptly mount and plumb them.

Our past members continue to prove valuable contributors to the team. We have received both monetary and in-kind donations from our loyal alumni, the most recent contribution being a complete resurfacing of our 2 previous engines. Into the revitalized engine blocks new pistons, head gaskets, cams, and bearings will be inserted. We have saved a significant amount of money by preserving our old engines at a discounted rate as opposed to purchasing new ones.

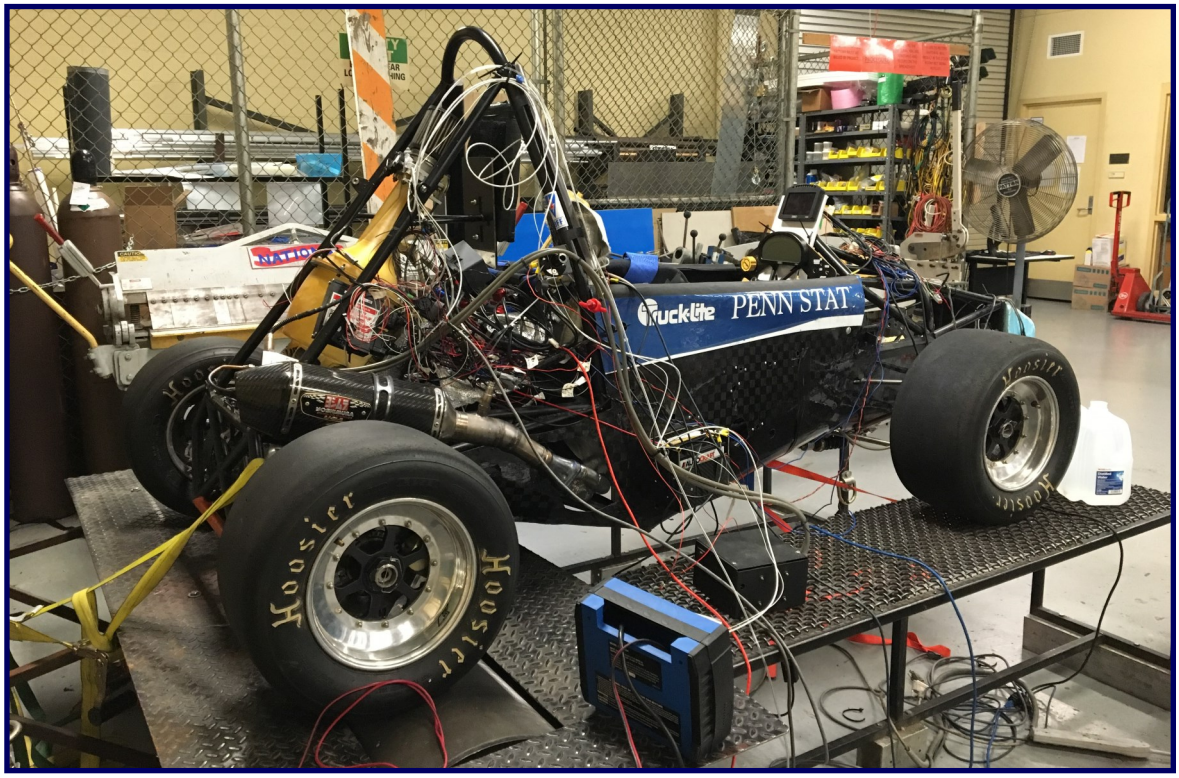

2017 car on dynamometer

SUSPENSION

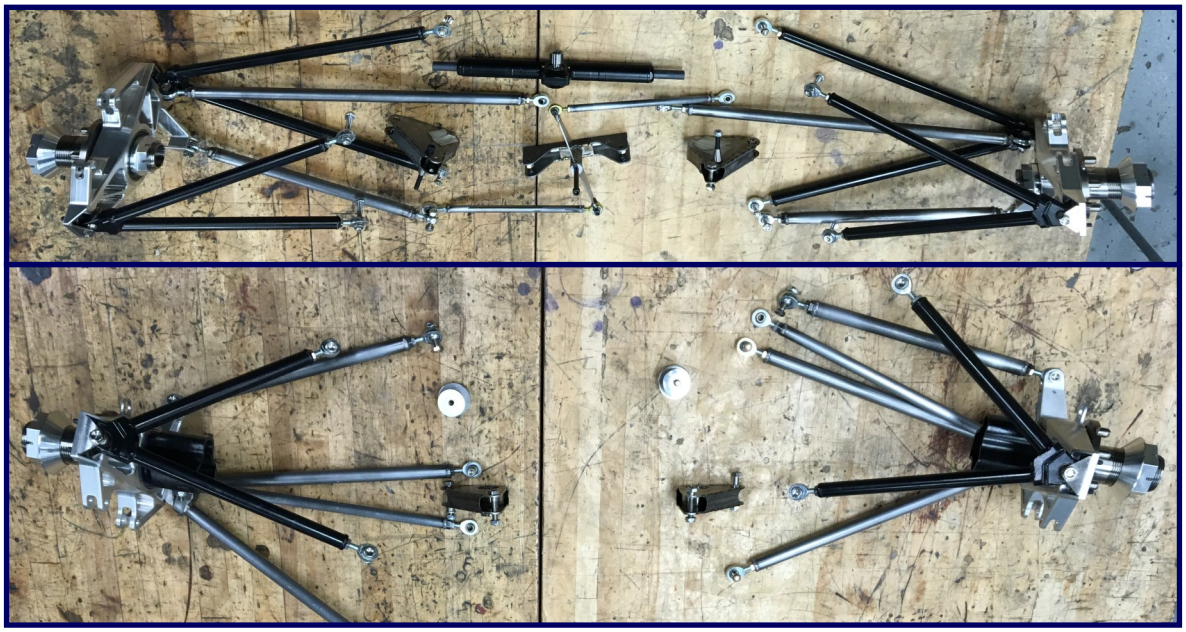

Front (top) and rear (bottom) suspension prepared to mount to chassis.

The rear suspension assembly was completed in February, with uprights, A-arms, pushrods, bellcranks, shocks, and anti-roll bar mounted onto the rear sub-frame. We were therefore able to move onto the front suspension assembly which may very soon be mounted thanks to the recent completion of the monocoque. Firstly though, we must carefully drill into the monocoque and epoxy inserts in. The clevises will be fastened to the inserts and the A-arms will be mounted. Front uprights, wheel centers, pushrods, bellcranks, and anti-roll bars will follow shortly thereafter. The new pushrod actuation meant that our front anti-roll bars needed to take on a creative new design

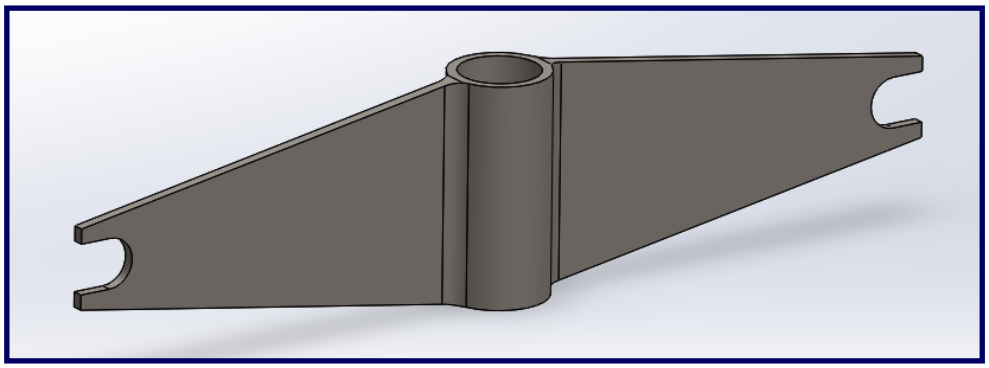

New front anti-roll bar design

Like the wind tunnel, the kinematics and compliance testing that we annually conduct at Bridgestone is an invaluable technical resource. Very few companies in the automotive industry have access to such advanced testing techniques. Only once we understand that can we appreciate how unique an opportunity it is for our Formula SAE team run by university students to be granted near exclusive access. Throughout our vehicle development, our community outreach, and our performance at competition, we strive to represent close partners like Bridgestone with the same pride with which we represent ourselves. Our project is made possible by the continued support of these valuable partners. Thank you.

CHASSIS

The decision to switch to a carbon-fiber monocoque chassis was made during the 2017-2018 race season. The previous car's platform proved capable, but was quickly becoming outdated. We recognized that in order to remain competitive, we would have to employ new technologies and advanced manufacturing techniques. The automotive industry is making increased use of carbon fiber for frame construction, as were many other Formula SAE teams, so we began to consider transitioning ourselves. After much research, we concluded that we could develop a chassis that was both lighter and stronger than our then-current steel-tube space frame. However, we knew that by developing a new chassis, we would be forced to entirely redesign our suspension and aerodynamic systems. We acknowledged the commitment that the redesign would require and embraced the challenge. Finding time between our internships last summer, we researched, designed, and met to discuss the systems of the new car. The result was a car that was nearly entirely designed come summer's end.

Thanks to the diligent summertime design work, we were able to begin manufacturing our new vehicle as soon as the fall semester began. We started the monocoque by machining of our molds out of dense foam. Then, female fiberglass molds were made. After thorough surface finishing, layers of carbon fiber were inserted into the molds, followed by lightweight aluminum honeycomb, more layers of carbon, and finally a curing agent. The assembly went into the autoclave for a short curing period, and out came Penn State Racing's first ever carbon-fiber monocoque. It has since been rid of excess material and mated to the rear sub-frame.

There are still finishing touches to be made, but we are proud of the product that our hard work has spawned. The performance gains we hope to see from this development will make our car a contender in the dynamic events at the Formula SAE Michigan competition. During the static events, our capable members who saw this project through from start to finish will be well poised to defend it's design.

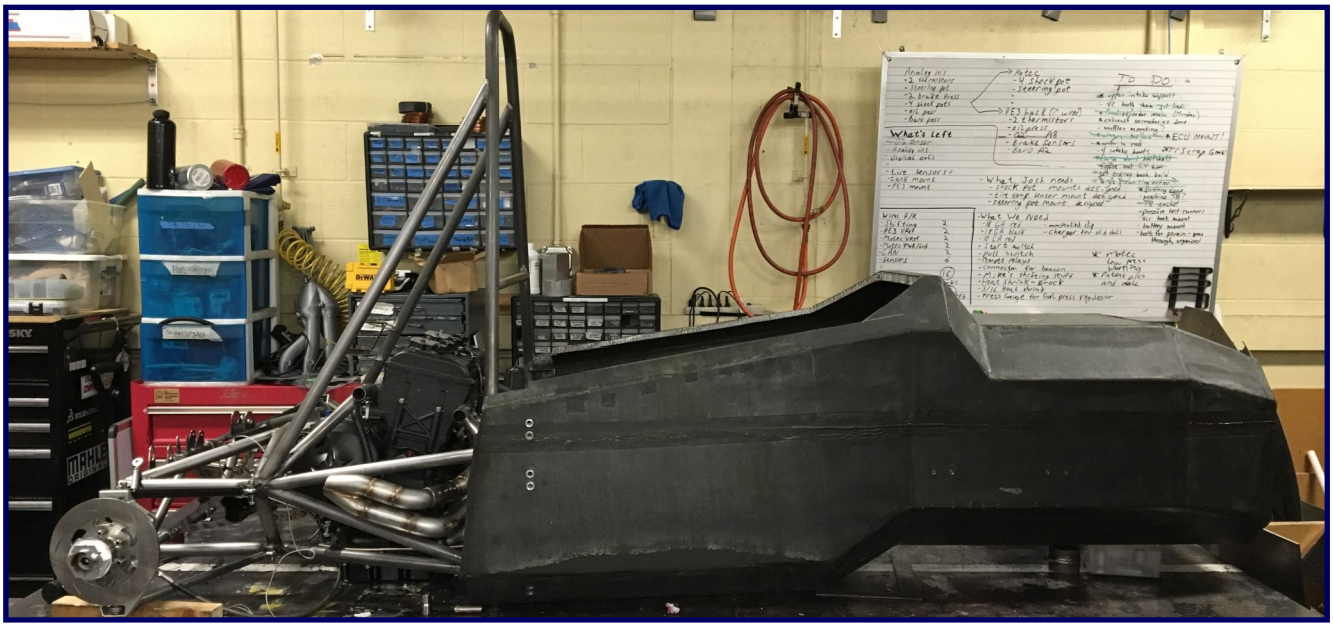

Penn State Racing's first ever carbon fiber monocoque chassis.

THANK YOU!

In addition to our sponsors, we are thankful for the unending support of the following individuals:

Dr. Thomas Juska
Applied Research Lab

Dr. Karen Thole
Department Head,
Mechanical and Nuclear
Engineering

Admiral Paul Sullivan
Executive Director,
Applied Research Lab

Dr. Matthew Parkinson
Learning Factory Director

Dr. Todd Palmer
Applied Research Lab

Cindy Winkelblech
Program Administrator

Becky Benson
Administrative Support Assistant

Bill Genet
Learning Factory Supervisor

Dr. Stephanie Stockar
FSAE Faculty Advisor

Rob McAllister
Learning Factory Supervisor

We also thank all of the Penn State Formula SAE alumni that continue to provide us with invaluable guidance and assistance every year!

CONTACT US

Email:
pennstateracing@gmail.com

Website:
http://sites.psu.edu/pennstateracing/

Facebook
https://www.facebook.com/PennStateRacing

Instagram
@pennstateracing

2016-2017 CORPORATE SPONSORS

Penn State Formula SAE would like to express our most sincere gratitude for the generous university and corporate partners who made our project possible—it would be impossible without your continued support. Thank you for your support!

DIAMOND LEVEL SPONSORS

($10,000 + or equivalent in products or services)

PENNSTATE ARL

THE PENN STATE LEARNING FACTORY
Collaborate. Educate. Innovate.

TIMET

THE LARSON INSTITUTE

PLATINUM LEVEL SPONSORS

($8,000 + or equivalent in products or services)

PennState College of Engineering
MECHANICAL AND NUCLEAR ENGINEERING

PennState College of Engineering
HAROLD AND INGE MARCUS DEPARTMENT OF INDUSTRIAL AND MANUFACTURING ENGINEERING

PennState College of Engineering
ENGINEERING SCIENCE AND MECHANICS

BRIDGESTONE

Ford

GOLD LEVEL SPONSORS

$5,000 + or equivalent in products or services)

SIEMENS

JOHN DEERE

GM

TITANX

AXALTA

realize inc.
Your Partner in Product Realization

2016-2017 CORPORATE SPONSORS

SILVER LEVEL SPONSORS

($3,000 + or equivalent in products or services)

SolidWorks

DUNA-USA
FOAMS & CHEMICALS

Cummins

VOLVO

PCC Precision Castparts Corp.

Ingersoll Rand

Truck-Lite

TITANIUM LEVEL SPONSORS

($1,000 + or equivalent in products or services)

Stuckeman School

FK BEARINGS

ArcelorMittal

80/20 Inc.
"The Industrial Erector Set®"

SKF

TeXtreme®

GT Gamma Technologies

DOW®

FOX RACING SHOX

BRONZE LEVEL SPONSORS

($500 + or equivalent in products or services)

Rock West COMPOSITES

ITCHING FOR FUN FIBERGLASS SUPPLY

CORSA TECHNIC

3DEFYING PRINTS LLC
STATE COLLEGE, PA

MiSUMi

HMS motorsport

SOLID CONCEPTS

mpc Millenium Plating Company
www.magplate.com

REDHORSE PERFORMANCE

OPTIMUM vehicle dynamics solutions

RICARDO